PT-300 Series Horizontal Steel, Low Profile Pump Trap

The Armstrong PT-300 Series Horizontal, Low Profile Pump Trap is the low maintenance non-electric solution to move condensate or other liquids from low points, low pressures or vacuum spaces to an area of higher elevation or pressure. Condensate can be returned at temperatures well above the 200°F (93°C) limit of conventional electric condensate pumps without the headaches of leaking seals or cavitation problems.

Features

- Economical non-electric operation. Uses inexpensive steam, air or inert gas.
- Low-maintenance operation. No leaking seals, impeller or motor problems means lower maintenance. No NPSH issues.
- Space-saving size. Low-profile body fits in tight spaces while allowing minimal fill head.
- Lower installation costs. Single trade required for installation and maintenance.
- Peace of mind. Standard unit is intrinsically safe.
- Durable construction. ASME code-stamped carbon steel body vessel.
- Corrosion resistance. Internals are all stainless steel for corrosion resistance and long life.
- Heavy-duty springs. Springs are made from long-lasting Inconel X-750.
- Efficiency. A closed loop means no motive or flash steam is lost. All valuable Btu's are captured and returned to the system.
- Safety. The pump can be used in flooded pits without fear of electrocution or circuit breaker defaults.
- Externally removable/replaceable seats. Seats can be replaced or cleaned without removing the mechanism assembly.



3-Year No Fail Warranty — 3-Year No Fail — Pump Trap Mechanism

PT-300 Pumping Trap Physical Data	
Model Number	**PT-308 PT-312**
	mm
B	686
C	882
D	361
E	268
F	461
G	195
H	519
P	236
R	57
S	621
T	305
U	360
V	143
W	127
X	340
Face to Face	1370
Weight lb (kg)	154 (70)
Number of Body/Cap Bolts	8
Check Valve Conn. in (mm)	3 (75)
Bronze Check Valves lb (kg)	29 (13)
Stainless Steel Check Valves lb (kg)	38 (17)

Maximum Allowable Pressure (Vessel Design): 150 psig @ 650°F (10 bar @ 343°C)

Maximum Operating Pressure: 125 psig (9 bar)

*Tolerance +/- 1/2"

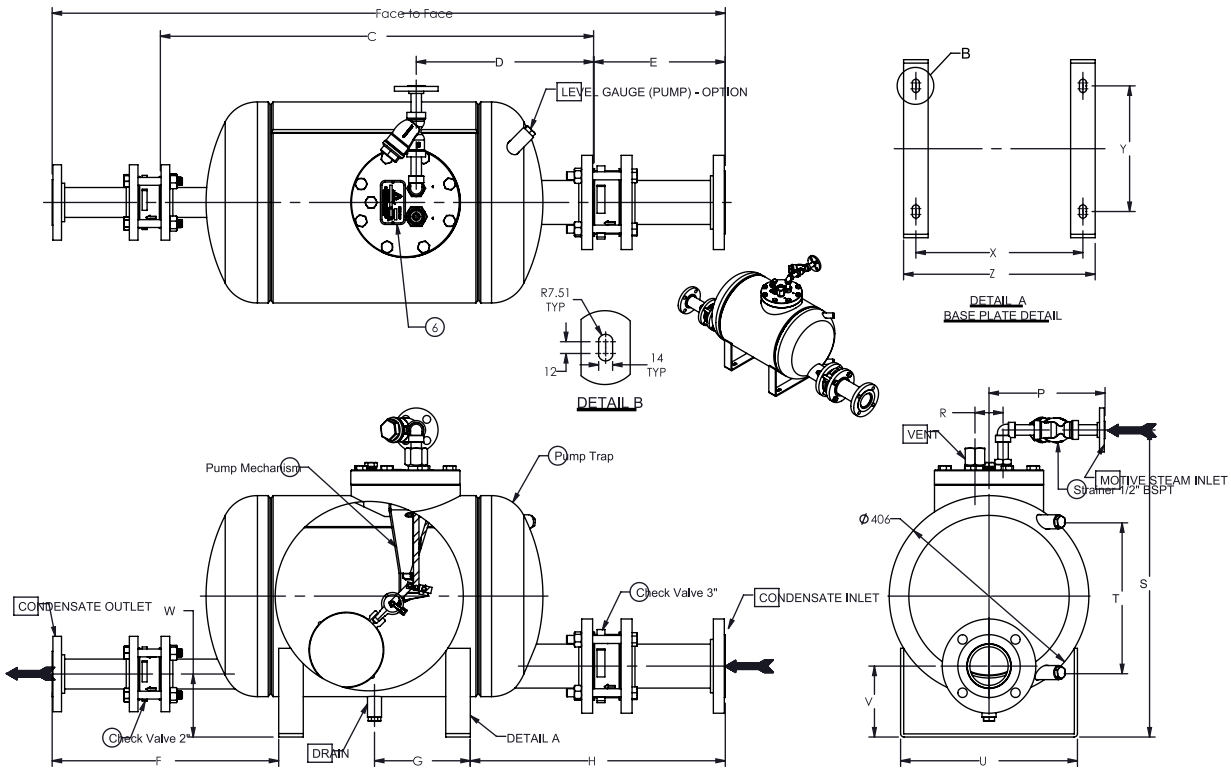

PT-300 Series Horizontal Steel, Low Profile Pump Trap

Armstrong

ALPHA GROUP

PT-300 Pumping Trap Materials	
Name of Part	**Series PT-300***
Body and Cap	Fabricated steel 150 psi ASME Sec. VIII design "U" stamped
Cap Gasket	Graphoil
Bolts	SA-449 steel
Nuts	None
Inlet Valve Assembly	Stainless steel
Vent Valve Assembly	Stainless steel
Valve Assembly Washers	Zinc plated steel
Plug	Steel
Mechanism Assembly	Stainless steel
Springs	Inconel X-750

NOTES: Optional flanged or socketweld connections available. Consult factory.
*Series PT-300 is available in all stainless steel. Consult factory.

PT-300 Pumping Trap Connection Sizes				
Model	**Horizontal Steel**			
	PT-308		**PT-312**	
	in	mm	in	mm
Inlet Connection	2	50	3	80
Outlet Connection	2	50	2	50
Motive Pressure Connection	1/2	15	1/2	15
Vent Connection	1	25	1	25
Optional Gauge Glass Connection	1/2	15	1/2	15

PT-300 Pumping Trap Capacities

Motive Pressure		Total Lift or Back Pressure		PT-308 (12" Fill Head) 2" x 2"				PT-312 (12" Fill Head) 3" x 2"			
				Steam Motive		Air Motive		Steam Motive		Air Motive	
psig	bar	psig	bar	lb/hr	kg/hr	lb/hr	kg/hr	lb/hr	kg/hr	lb/hr	kg/hr
15	1.0	5	0.34	6,900	3,130	9,200	4,173	9,000	4,082	12,300	5,579
25	1.7			10,200	4,622	10,900	4,944	13,200	5,987	14,200	6,441
50	3.5			10,600	4,808	11,100	5,035	15,100	6,849	15,800	7,167
75	5			10,800	4,898	11,300	5,126	15,300	6,940	16,100	7,303
100	7			11,200	5,080	*	*	15,500	7,031	*	*
125	8.5			11,600	5,261	*	*	16,600	7,530	*	*
25	1.7	15	1	7,000	3,175	10,100	4,581	9,000	4,082	11,200	5,080
50	3.5			9,600	4,354	10,900	4,944	12,800	5,806	13,800	6,260
75	5			10,750	4,876	11,100	5,035	14,200	6,441	15,000	6,804
100	7			10,900	4,944	*	*	14,300	6,486	*	*
125	8.5			11,300	5,125	*	*	15,100	6,849	*	*
35	2.5	25	1.5	7,100	3,221	9,200	4,173	8,100	3,674	11,500	5,216
50	3.5			8,300	3,765	10,200	4,627	10,200	4,627	12,750	5,783
75	5			10,100	4,581	11,000	4,989	12,500	5,670	13,500	6,123
100	7			10,200	4,627	*	*	12,700	5,761	*	*
125	8.5			10,300	4,672	*	*	13,000	5,897	*	*
50	3.5	40	2.75	5,700	2,585	7,600	3,447	6,600	2,994	9,800	4,445
60	4			6,600	2,994	8,800	3,992	8,400	3,810	10,500	4,763
75	5			7,600	3,447	10,100	4,581	9,800	4,445	12,700	5,761
100	7			8,400	3,810	*	*	10,100	4,581	*	*
125	8.5			9,400	4,264	*	*	10,300	4,672	*	*
70	4.5	60	4	4,500	2,041	7,000	3,175	6,000	2,722	10,200	4,627
75	5			4,700	2,132	7,100	3,221	6,400	2,903	10,400	4,717
100	7			6,400	2,903	*	*	7,100	3,221	*	*
125	8.5			6,600	2,994	*	*	7,400	3,357	*	*

NOTES: Published capacities are based on the use of external check valves supplied by Armstrong. Fill head measured from drain point to top of pump cap. See figures on page 234. Although motive pressures are shown at high pressure differentials (difference between motive inlet pressure and total lift or back pressure), it is preferable to use a motive pressure of 10 - 15 psig (0.65 - 1 bar) above discharge (outlet) pressure. This ensures longevity of economical (brass) check valves and reduces both venting time and temperature differential (on steam). If a higher differential is used, stainless steel check valves are recommended.
*Consult factory.

PT-300 Capacity Conversion Factors for Other Fill Heads											
Fill Head		in	mm	in	mm	in	mm	in	mm	in	mm
		0	0	6	152	12	305	24	610	36	914
Model	PT-308	0.7		0.85		1.0		1.2		1.3	
	PT-312	0.7		0.85		1.0		1.08		1.2	

NOTES: Fill head is measured from drain point to top of cap.

Options

Use of external check valves required for operation of pumping trap.

- **Inlet Swing Check Valve** NPT Bronze ASTM B 62 Teflon® Disc Class 150 (Minimum)
- **Outlet** Stainless Steel Check Valve Class 150 (Minimum)
- **In-line Check Valves** Stainless Steel Non-Slam Check Valves
- **Bronze Gauge Glass Assembly**
- **Steel Gauge Glass Assembly**
- **Removable Insulation Jacket**
- **Digital Cycle Counter**